LAQUA

Benchtop Water Quality Instruments
Colour Touchscreen Meters

F-73
Dual Channel

F-72
Single Channel

Features:

- Up to 5 calibration points for pH and Ion
- 5 pH buffer groups – USA, NIST, NIST2, China, and Custom
- 0.01 and 0.001 pH resolutions
- pH calibration interval setting – 1 to 999 days
- 1-point ORP calibration
- Ion calibration curve and standard addition methods
- Temperature sensor calibration function
- Single channel for F-72 and dual channel display for F-73

Ordering Information:		
Meter Kit*	 **F-72A-S** (3999960011) • F-72 meter • electrode stand • protection cover • power adaptor with 6 plugs • data acquisition software in USB • 9615S-10D - refillable, glass-body pH electrode with integrated temperature sensor, 1m cable, BNC & phono jack • 502-S - pH 4.01, 7.00, 10.01, 3.33M KCl solutions (250ml each)	 **F-73A-S** (3999960012) • F-73 meter • electrode stand • protection cover • power adaptor with 6 plugs • data acquisition software in USB • 9615S-10D - refillable, glass-body pH electrode with integrated temperature sensor, 1m cable, BNC & phono jack • 502-S - pH 4.01, 7.00, 10.01, 3.33M KCl solutions (250ml each)
Meter Kit with 21 CFR Part 11 Software	**F-72A-S-CFR** (3999960210)	**F-73A-S-CFR** (3999960212)
Meter with Electrode Stand	**F-72G** (3000347100) • F-72 meter • electrode stand • protection cover • power adaptor with 6 plugs • data acquisition software in USB	**F-73G** (3000347200) • F-73 meter • electrode stand • protection cover • power adaptor with 6 plugs • data acquisition software in USB
pH Electrode	**9615S-10D** (3200585428) • refillable, glass-body pH electrode with integrated temperature sensor, 1m cable, BNC & phono jack	**9615S-10D** (3200585428) • refillable, glass-body pH electrode with integrated temperature sensor, 1m cable, BNC & phono jack
USA pH Buffer Set	**502-S** (3999960016) • pH 4.01, 7.00, 10.01, 3.33M KCl solutions (250ml each)	**502-S** (3999960016) • pH 4.01, 7.00, 10.01, 3.33M KCl solutions (250ml each)
NIST pH Buffer Set	**501-S** (3999960015) • pH 4.01, 6.86, 9.18, 3.33M KCl solutions (250ml each)	**501-S** (3999960015) • pH 4.01, 6.86, 9.18, 3.33M KCl solutions (250ml each)

*Kit with 501-S is available upon request. Add 'N' suffix to the order code when ordering.

Model	F-72 pH/ORP/Ion/Temp (°C)	F-73 Dual Channel pH/ORP/Ion/Temp (°C)
pH Range	-2.000 to 20.000 pH	-2.000 to 20.000 pH
Resolution	0.01 / 0.001 pH	0.01 / 0.001 pH
Accuracy	± 0.001 pH	± 0.001 pH
Calibration Points	Up to 5	Up to 5
Buffer Options	USA, NIST, NIST2, China, Custom	USA, NIST, NIST2, China, Custom
ORP Range	± 1999.9 mV	± 1999.9 mV
Resolution	0.1 mV	0.1 mV
Accuracy	±0.2 mV	±0.2 mV
Ion Range	0.000 µg/L to 9999 g/L (mol/L)	0.000 µg/L to 9999 g/L (mol/L)
Resolution	4 significant digits	4 significant digits
Accuracy	± 0.3% of full scale	± 0.3% of full scale
Calibration Points	Up to 5	Up to 5
Temperature Range	-30.0 °C to 130.0 °C	-30.0 °C to 130.0 °C
Resolution	0.1 °C	0.1 °C
Accuracy	±0.4°C	±0.4°C
Calibration Option	Yes	Yes
Navigation Function	Yes	Yes
Memory	2000	2000
Auto Data-Logging	Yes	Yes
Data Search	Yes	Yes
Custom Printing	Yes	Yes
Real Time Clock	Yes	Yes
Date / Time Stamp	Yes	Yes
Sample ID Input	Yes	Yes
Operator ID Input	Yes	Yes
Password Setting	Yes	Yes
Auto Stable / Auto Hold	Yes	Yes
Offset / Slope Display	Yes (independent acid and alkaline slopes depending on calibration)	Yes (independent acid and alkaline slopes depending on calibration)
Calibration Alarm Limit	Yes	Yes
Electrode Status	On screen display	On screen display
Diagnostic Messages	Yes	Yes
Display	Touch screen color graphic LCD	Touch screen color graphic LCD
Languages	English / Japanese / Chinese / Korean / Vietnamese	English / Japanese / Chinese / Korean / Vietnamese
Inputs	BNC, phono, DC socket	Dual BNC, dual phono, DC socket
Outputs	USB, RS232C, analog output	USB, RS232C, analog output
Power Requirements	AC adaptor 100 ~ 240V, 50/60 Hz	AC adaptor 100 ~ 240V, 50/60 Hz
Electrode Stand	Stand alone	Stand alone
Weight	700g	700g
Dimensions	170 (W) x 174 (D) x 73 (H) mm	170 (W) x 174 (D) x 73 (H) mm

pH Electrode Selection Guide

		3-in-1 ELECTRODES											COMBINATION ELECTRODES				
		PLASTIC				STANDARD ToupH	LONG ToupH	MICRO ToupH	SLEEVE ToupH	SLEEVE	NON-AQUEOUS	NEEDLE	PLASTIC	STANDARD ToupH	MICRO ToupH	SLEEVE ToupH	LONG
		9625-10D	9630-10D	9631-10D	9632-10D	9615S-10D	9680S-10D	9618S-10D	9681S-10D	6367-10D	6377-10D	6252-10D	9425-10C	9415-10C	9418-10C	9481-10C	6069-10C
Specification	Applicable temperature range (°C)	0-100	0-100	0-60	0-100	0-100	0-100	0-60	0-60	0-60	0-60	0-60	0-100	0-100	0-60	0-60	0-60
	Diameter (mm)	16	16	16	16	12	8	3	12	12	12	12	16	12	3	12	3
	Length (mm)	150	150	155	150	198	283	185	203	150	150	150	150	198	185	203	291
pH - Sample Conditions																	
Aqueous Solution	Conductivity: Normal (over 100 mS/m)	◉	◉	◉	◉	◉	◉	◉	◉	◉	◉	◉	◉	◉	◉	◉	◉
	Conductivity: Low (approx.10 ~100 mS/m		◉						○		◉					○	
	Conductivity: Very low (approx. 5 ~100 mS/m		○						○		◉					○	
	Conductivity: High (approx. 5 S/m)	○	○	○	○	○	○		◉				○	○		◉	
	Strong alkaline (pH 10-12)				◉	○	○		○	○				○		○	
	Strong acidity (pH 0-2) * Except HF sample			◉		◉								◉			
	Quick heat change (within 50°C)	◉	◉	◉	◉								◉				
	High viscosity (approx. 5 Pa·S)								◉	○	◉					◉	
	Containing non-aqueous solvent					○	○	○	○	○	◉			○	○	○	
	Suspension					○	○	○	◉		◉			○	○	◉	
Solid/ Semisolid	Inside											○					
	Surface																
Sample Containers	Microtube/plate (> 50 µL)							◉							◉		
	Ampule > ø4 mm							◉							◉		○
	Micro container (> 2 mL)						○	◉							◉		○
	Tube ID:13 mm, L:100 ~ 150 mm						◉										◉
	Beaker 10 mL ~ 1 L	◉	◉	◉	◉	◉	○	○	○	○	○	○	◉	◉	○	○	○
	Large container (> 1 L)	○	○	○	○	○	◉						○	○			
	Petri dish																
	Droplet																
Water	Pure/ion-exchange water (approx. 0.1 mS/m)/ Distilled water (approx. 0.5 mS/m)					○					◉			○			
	Tap/drinking water (approx. 10 mS/m)	○	◉			○			○		◉		○	○		○	
	Surface water		◉			○			○		◉			○		○	
	Pharmaceutical water/ Enviromental water/acid rain	○	○			○			○		○		○	○		○	
Chemical reagent/ solvent	Caustic/strong acid (Except HF sample)			◉		◉			○					◉		○	
	Hydrofluoric acid			◉													
	Surfactant					○			◉		○			○		◉	
	Water-based paint					○			◉		○			○		◉	
	Dye/coloring agent								◉		○					◉	
Pharmaceutical/ biological sample	Protein-containing sample					○		○	◉	○				○	○	◉	
	Medicinal preparation							○	○		○				○	○	
	Enzyme solution						○	◉				○			◉		
	Tris buffer					◉		○	○					◉	○	○	
	Suspension					○			◉		◉			○		◉	
	Agar medium																
Food	Jam					○			◉		○	○		○		◉	
	Meat/fish/Fruit/vegetable/ Dough											◉					
	Honey										◉						
	Cheese/butter											○					
	Yogurt	○	○			○			○	○		○	○	○		○	
Beverage/ seasoning	Beer	○	○			○			◉	○	◉		○	○		◉	
	Milk/Carbonated drink/juice/ sauce/soy sauce					○			◉	○	○			○		◉	
	Mayonnaise/ketchup					○			◉		○			○		◉	
Cosmetic/ lotion	Beauty cream/mascara					○			◉		○	○		○		◉	
	Gel/soap/shampoo/Hair dye lotion					○			◉		○			○		◉	
	Emulsified liquid					○			○		◉			○		○	

◉ Recommended ○ Can be measured

		ISFET ELECTRODE
LONG ToupH	FLAT	GENERAL
9480-10C	6261-10C	0040-10D
0-100	0-50	0-60
8	12	16
283	150	190
◉	◉	◉
○		
○		
○		○
○		○
	◉	◉
○		
◉		
○	○	○
◉		
	◉	◉
	◉	◉
○		
	◉	◉
	○	◉ (surface)
	○	◉ (surface)
		○ (surface)
	○	○ (surface)
	○	◉ (surface)

Stable measurement for a wide range of samples. Standard ToupH glass electrode (9615S-10D)

STANDARD ToupH

High stability and drift reduction. No more worries about the timing of your measurement value readings.

- Uses responsive glass that is 10 times stronger than JIS standard. The domed shape provides strength in all directions, greatly reducing damage concerns.
- Constructed with smooth surfaces for easy wiping and cleaning.

Recommended

Perfect for preparing buffers. Can be used on a wide range of aqueous test solutions.

Stable measurement for routine testing. Standard plastic electrode (9625-10D)

STANDARD

The electrode has a plastic body which is ideal for general purpose measurement.

- Can be submerged up to 1m depth and 30mins. (with refilling port closed)
- Waterproof, Pb-free

Recommended

Ideal for general purpose use. For measurement of tap water and drinking water.

For extremely small samples Micro ToupH glass electrode (9618S-10D)

MICRO ToupH

This pH electrode with temperature compensation sensor can take measurements from samples as small as 50μL, the smallest in the world.

- Our original manufacturing technology (Japanese Patent No. 4054245) is used to produce 2-ply piping 3mm in diameter.
- Compatible with extremely small containers such as micro tubes etc.
- The temperature sensor is located at the tip for high-speed temperature response. Refrigerated samples can be measured without needing to wait for them to return to room temperature.

Recommended

Can be used for a wide range of aqueous solutions, including those that cannot be obtained in large quantities.
We recommend using our specialized cleaning solution after measuring samples that contain proteins.

For using a large container Long ToupH glass electrode (9680S-10D)

LONG ToupH

283 mm length & 8 mm diameter. The long, thin design makes this electrode perfect for measuring in large containers and test tubes.

- Uses responsive glass that is 10 times stronger than JIS standard. The domed shape provides strength in all directions, greatly reducing damage concerns.

Recommended

For measuring samples such as microbe culture fluids in test tubes.
We recommend that it be used with the long type electrode stand (FA-70L).

For highly viscous samples Sleeve ToupH glass electrode (9681S-10D)

SLEEVE ToupH

Stable measurement can also be achieved for high viscous samples.

- The liquid junction section is constructed with a movable sleeve that can be rinsed clean, preventing highly viscous samples from clogging the liquid junction, and maintaining stable measurement performance

Recommended

For highly viscous samples and solutions, and samples that contain non-aqueous solvents (such as cosmetics or paints). We recommend that you take measurements while using the graph display function to confirm stable responses.
(We recommend washing with a neutral detergent after use with samples that contain oil.)

For the surface of solid samples General ISFET pH electrode (0040-10D)

GENERAL ISFET

The sensor is located on the flat surface of the electrode tip, with less than a 100 μm protrusion from the housing.

- Measurements can be made from a minute amount of moisture on the solid sample surface.
- Use of a semiconductor sensor means there are no concerns that the electrode will be damaged.
- Also perfect for measuring samples in shallow containers such as Petri dishes.
- Replaceable sensor

Recommended

For highly viscous samples and solutions, and samples that contain non-aqueous solvents (such as cosmetics or paints). We recommend that you take measurements while using the graph display function to confirm stable responses.
(We recommend washing with a neutral detergent after use with samples that contain oil.)

Electrodos ISE combinados

Los electrodos selectivos de ion son sensibles a la concentración de ion específico presente en la muestra y son electrodos a potencial variable. Se utilizan en conjunción con de un electrodo referencia para medir la concentración de los iones. El amplio rango electrodos que ofrece HORIBA, es el resultado de muchos años de experiencia y desarrollo & investigación en tecnología electroquímica.

Cuando las mediciones se hagan utilizando un medidor de ion, la calibración con varias soluciones estándar permite una medición directa de la concentración del ion deseado. Tenga en cuenta que como los análisis de ion están afectados por la temperatura así se deben medir los valores a la temperatura fija o usando un electrodo de temperatura adicional para usar la función de compensación de temperatura.

Modelo	Accesorios incluidos	Rango de temp. (°C)	Rango de medición	Rango de pH
 **Electrodo de ion Amoniaco (NH_3)** **5002S-10C** 3200698386 Longitud total: 161 mm Diámetro de la sonda: 15 mm Conector: BNC	• Membrana, 3 piezas • Solución estándar de ion Amonio a 1000mg/L, 50ml • Solución estándar de ion Amonio a 100mg/L, 50ml • Solución de relleno de Amoniaco para el electrodo, 50ml • Jeringa • Pipeta de plástico • Tubo de almacenamiento • Manual	0 - 50	0.1 - 1,000 mg/L NH_3	Ajustar arriba de pH 12
 **Electrodo de ion Calcio (Ca^{2+})** **6583S-10C** 3200697410 Longitud total: 150 mm Diámetro de la sonda: 16 mm Conector: BNC	• Membrana de reemplazo, 2 piezas • Solución estándar de ion Calcio a 1000mg/L, 50ml • Solución estándar de ion Calcio a 100mg/L, 50ml • Solución de relleno de Calcio para el electrodo, 50ml • Ajustador de fuerza ionica para Calcio, 50ml • Jeringa • Pipeta de plástico • Tubo de almacenamiento • Manual	0 - 50	0.4 - 40,080 mg/L Ca^{2+} (10^{-5} a 1 mol/L Ca^{2+})	4.0 mg/L (10^{-4} mol/L) Ca^{2+}, pH 5 a 11
 **Electrodo de ion Cloruro (Cl^-)** **6560S-10C** 3200697407 Longitud total: 150 mm Diámetro de la sonda: 16 mm Conector: BNC	• Membrana • Solución estándar de ion Cloruro a 1000mg/L, 50ml • Solución estándar de ion Cloruro a 100mg/L, 50ml • Solución de relleno de Cloruro para el electrodo, 50ml • Ajustador de fuerza ionica para Cloruro, 50ml • Jeringa • Pipeta de plástico • Tubo de almacenamiento • Hoja abrasiva resistente al agua • Manual	0 - 50	0.35 - 35,000 mg/L Cl^- (10^{-5} a 1 mol/L Cl^-)	350 mg/L (10^{-2} mol/L) Cl^-, pH 3 a 11
 **Electrodo de ion Fluoruro (F^-)** **6561S-10C** 3200693774 Longitud total: 150 mm Diámetro de la sonda: 16 mm Conector: BNC	• Membrana • Solución estándar de ion Fluoruro a 1000mg/L, 50ml • Solución estándar de ion Fluoruro a 100mg/L, 50ml • Solución de relleno de Fluoruro para el electrodo, 50ml • Ajustador de fuerza ionica para Fluoruro, 50ml • Jeringa • Pipeta de plástico • Tubo de almacenamiento • Manual	0 - 50	0.2 - 19,000 mg/L F^- (10^{-6} a 1 mol/L F^-)	20 mg/L (10^{-3} mol/L) F^-, pH 4 a 10
 **Electrodo de ion Nitrato (NO_3^-)** **6581S-10C** 3200697408 Longitud total: 150 mm Diámetro de la sonda: 16 mm Conector: BNC	• Membrana de reemplazo, 2 piezas • Solución estándar de ion nitrato a 1000mg/L, 50ml • Solución estándar de ion nitrato a 100mg/L, 50ml • Solución de relleno de nitrato para el electrodo, 50ml • Ajustador de fuerza ionica para nitrato, 50ml • Jeringa • Pipeta de plástico • Tubo de almacenamiento • Manual	0 - 50	0.62 - 62,000 mg/L NO_3^- (10^{-5} a 1 mol/L NO_3^-)	62 mg/L (10^{-3} mol/L) NO_3^-, pH 3 a 7
 **Electrodo de ion Potasio (K^+)** **6582S-10C** 3200697409 Longitud total: 150 mm Diámetro de la sonda: 16 mm Conector: BNC	• Membrana de reemplazo, 2 piezas • Solución estándar de ion Potasio a 1000mg/L, 50ml • Solución estándar de ion Potasio a 100mg/L, 50ml • Solución de relleno de Potasio para el electrodo, 50ml • Ajustador de fuerza ionica para Potasio, 50ml • Jeringa • Pipeta de plástico • Tubo de almacenamiento • Manual	0 - 50	0.04 - 39,000 mg/L K^+ (10^{-6} a 1 mol/L K^+)	3.9 mg/L (10^{-4} mol/L) K^+, pH 5 a 11

Coeficiente de selección	Membranas de reemplazo	Soluciones de relleno para electrodo	Solución estándar a 100 mg/L	Solución estándar a 1000 mg/L	Ajustador de fuerza ionica	Aplicaciones
—	**Membrana para electrodo NH_3** 3200705774	500-NH3-IFS 3200697173	500-NH4-SL 3200697172	500-NH4-SH 3200697171	500-NH3-ISA 3200697174	Agricultura, suelo, central eléctrica, agua, acuario, agua de mar, agua residual, enchapado de metales, gases ambiente o de chimenea industrial, cultivo o muestra biológica
Fe^{3+} = 0.1, Fe^{2+}, Zn^{2+} = 1, Sr^{2+} = 50 Ni^{2+}, Cu^{2+} = 70, Co^{2+} = 350 Mn^{2+} = 500, Mg^{2+} = 1,000 Na^{+}, K^{+}, Ba^{2+}, NH_4^{+} = encima de 1,000	**Membrana de Calcio** **7683S** 3200697414	500-CA-IFS 3200697177	500-CA-SL 3200697176	500-CA-SH 3200697175	500-CA-ISA 3200697178	Agricultura, tejido foliar/savia de planta, suavizador de agua, agua de caldera industrial, agua potable, cultivo biológico, análisis dental o medical y industria alimentaria (comida y bebida)
$S_2O_3^{2-}$, S^{2-}, I^{-}, Ag^{+}, Hg^{2+} = No acceptable SCN^{-}= 0.3, MnO_4^{-}= 0.1 Br^{-}= 0.03 NO_3^{-}, F^{-}, HCO_3^{-}, SO_4^{2-}, PO_4^{2-}= 1,000	**Membrana de Cloruro** **7660S** 3200697411	500-CL-IFS 3200697169	500-CL-SL 3200697168	500-CL-SH 3200697167	500-CL-ISA 3200697170	Agricultura, tejido foliar/savia de planta, rio, agua de la llave, suelo, agua de caldera industrial, análisis clínica, sudor, orina, enchapado de metales y industria alimentaria (comida y bebida)
Interferencia posible cuando la muestra contiene ion con carga multiple (ej. Al^{3+}, Fe^{3+})	**Membrana de Fluoruro** **7661S** 3200693606	500-F-IFS 3200697165	500-F-SL 3200697164	500-F-SH 3200697163	500-F-TISAB 3200697166	Dental, pasta dentífrica, enjuagues bucales, agua potable, agua residual, agua de mar, gases ambiente o de chimenea industrial, ácidos, suelo, comida, fluido biológico, tejido foliar/savia de planta, carbón, bebida carbonatada.
ClO_4^{-}, I^{-} = No acceptable, Br^{-}= 2 NO_2^{-}= 3, Cl^{-} = 300 HCO_3^{-}, $H_2PO_4^{-}$, SO_4^{2-}=encima de 1000	**Membrana de Nitrato** **7681S** 3200697412	500-NO3-IFS 3200697181	500-NO3-SL 3200697180	500-NO3-SH 3200697179	500-NO3-ISA 3200697182	Agricultura, tejido foliar/savia de planta, fertilizante, agua de superficie, agua de mar, agua potable, agua residual, suelo, carne, verduras, comida y bebida
Rb^{+} = 0.4, Cs^{+} = 3, NH_4^{+} = 70 Li^{+}, Na^{+}, Mg^{2+}, Ca^{2+}, Sr^{2+}, Ba^{2+} = encima de 1,000	**Membrana de Potasio** **7682S** 3200697413	500-K-IFS 3200697185	500-K-SL 3200697184	500-K-SH 3200697183	500-K-ISA 3200697186	Agricultura, tejido foliar/savia de planta, suelo, agua residual, rio, agua de la llave, análisis clínica, saliva, suero, fertilizante, vino, comida, producto lácteo y bebida.

Nota: informaciones detalladas sobre las soluciones estándar, ajustador de fuerza iónica, y soluciones de relleno de electrodo pueden ser encontradas en la página 14.

501-S NIST pH Buffer Solution Kit

502-S USA pH Buffer Solution Kit

503-S Conductivity Standard Solution Kit

ORP Powders

220 250

230

Cleaning Solutions

pH Buffer Solution Kits

Code	Part No.	Description	Volume
501-S	3999960015	NIST pH Buffer Solution Kit (pH 4.01, 6.86, 9.18 buffers & 3.33M KCl)	250ml each
502-S	3999960016	USA pH Buffer Solution Kit (pH 4.01, 7.00, 10.01 buffers & 3.33M KCl)	250ml each

pH Buffer Solutions

Code	Part No.	Description	Volume
500-2	3999960028	pH 1.68 Buffer Solution at 25°C	500ml
500-4	3999960029	pH 4.01 Buffer Solution at 25°C	500ml
500-686	3999960030	pH 6.86 Buffer Solution at 25°C	500ml
500-7	3999960031	pH 7.00 Buffer Solution at 25°C	500ml
500-9	3999960032	pH 9.18 Buffer Solution at 25°C	500ml
500-10	3999960033	pH 10.01 Buffer Solution at 25°C	500ml
500-12	3999960034	pH 12.46 Buffer Solution at 25°C	500ml

Conductivity Standard Solution Kit

Code	Part No.	Description	Volume
503-S	3999960017	Conductivity Standard Solution Kit (84µS/cm, 1413µS/cm, 12.88mS/cm & 111.8mS/cm)	250ml each

Conductivity Standard Solutions

Code	Part No.	Description	Volume
500-21	3999960035	84 µS/cm Conductivity Standard Solution	500ml
500-22	3999960036	1413 µS/cm Conductivity Standard Solution	500ml
500-23	3999960037	12.88 mS/cm Conductivity Standard Solution	500ml
500-24	3999960038	111.8 mS/cm Conductivity Standard Solution	500ml

ORP Powders

Code	Part No.	Description	Volume
160-51	3200043618	89 mV at 25°C (for 250ml solution)	10 sachets/pack
160-22	3200043617	258 mV at 25°C (for 250ml solution)	10 sachets/pack

pH/ORP Electrode Filling Solutions

Code	Part No.	Description	Volume
525-3	3999960023	3.33M KCl	250ml
300	3200043640	3.33M KCl	250ml

pH Electrode Cleaning Solutions

Code	Part No.	Description	Volume
220	3014028653	For removing inorganic residues from glass membrane and liquid junction	2 x 50ml
230	3200530494	For removing inorganic and organic residues from glass membrane (30ml Solution A & 100ml Solution B)	30ml & 100ml
250	3200366771	For removing protein residues from glass membrane and liquid junction	400ml

Soluciones Estándar para Electrodo de Calcio

Soluciones Estándar para Electrodo de Cloruro

Soluciones Estándar para Electrodo de Fluoruro

Soluciones Estándar para Electrodo de Potasio

Soluciones Estándar para Electrodo de Amoniaco

Soluciones Estándar para Electrodo de Nitrato

Soluciones estándar de ion

Código	Referencia	Descripción	Volumen
500-NH4-SH	3200697171	Soluciones Estándar a 1000 mg/L para Electrodo de Amoniaco	500ml
500-NH4-SL	3200697172	Soluciones Estándar a 100 mg/L para Electrodo de Amoniaco	500ml
500-CA-SH	3200697175	Soluciones Estándar a 1000 mg/L para Electrodo de Calcio	500ml
500-CA-SL	3200697176	Soluciones Estándar a 100 mg/L para Electrodo de Calcio	500ml
500-CL-SH	3200697167	Soluciones Estándar a 1000 mg/L para Electrodo de Cloruro	500ml
500-CL-SL	3200697168	Soluciones Estándar a 100 mg/L para Electrodo de Cloruro	500ml
500-F-SH	3200697163	Soluciones Estándar a 1000 mg/L para Electrodo de Fluoruro	500ml
500-F-SL	3200697164	Soluciones Estándar a 100 mg/L para Electrodo de Fluoruro	500ml
500-NO3-SH	3200697179	Soluciones Estándar a 1000 mg/L para Electrodo de Nitrato	500ml
500-NO3-SL	3200697180	Soluciones Estándar a 100 mg/L para Electrodo de Nitrato	500ml
500-K-SH	3200697183	Soluciones Estándar a 1000 mg/L para Electrodo de Potasio	500ml
500-K-SL	3200697184	Soluciones Estándar a 100 mg/L para Electrodo de Potasio	500ml

Ajustador de Fuerza Iónica

Código	Referencia	Descripción	Volumen
500-NH3-ISA	3200697174	Ajustador de Fuerza Iónica para ion Amoniaco	500ml
500-CA-ISA	3200697178	Ajustador de Fuerza Iónica para ion Calcio	500ml
500-CL-ISA	3200697170	Ajustador de Fuerza Iónica para ion Cloruro	500ml
500-F-TISAB	3200697166	Ajustador de Fuerza Iónica para ion Fluoruro	500ml
500-NO3-ISA	3200697182	Ajustador de Fuerza Iónica para ion Nitrato	500ml
500-K-ISA	3200697186	Ajustador de Fuerza Iónica para ion Potasio	500ml

Soluciones de Relleno para electrodo

Código	Referencia	Descripción	Volumen
500-NH3-IFS	3200697173	Soluciones de Relleno para electrodo Amoniaco	500ml
500-CA-IFS	3200697177	Soluciones de Relleno para electrodo Calcio	500ml
500-CL-IFS	3200697169	Soluciones de Relleno para electrodo Cloruro	500ml
500-F-IFS	3200697165	Soluciones de Relleno para electrodo Fluoruro	500ml
500-NO3-IFS	3200697181	Soluciones de Relleno para electrodo Nitrato	500ml
500-K-IFS	3200697185	Soluciones de Relleno para electrodo Potasio	500ml

Accessories

Code	Part No.	Description
LAQUA-SW-21CFR11	3200707161	21 CFR Part 11 Software includes CD with PIN code, USB cable, and manual
Printer	3014030147 (230v) 3014030146 (120v)	Printer (for GLP/GMP compliance) Cable sold separately, Plain paper
Printer cable	3014030148	Printer cable (1.5 m)
Ink ribbon	3014030149	Printer paper (20 rolls)
Printer paper	3014030150	Ink ribbon (5 pcs/set)
Universal AC adapter	3200647413	Multi-Voltage (100-240V) with 6 plugs, (US, UK, EU, ANZ, Korea and China) 1.8 m cable
X-51	3014028368	Digital simulator X-51 (pH, mV, Ion, DO, temperature simulator)
X-52	3014028370	Digital simulator X-52 (Conductivity, temperature simulator)
LCD protection sheet	3200382462	LCD protection sheet (2 pcs/pack)
Protection cover	3200382441	Protection cover (Protects the meter for F-70, DS-70, 1000 series)
USB cable	3200373941	USB cable (to connect meter and PC.)
	3014030152	Analog cable (Analog (alarm) output cable)
Serial cable	3014030151	Serial cable (to connect meter and PC (Serial, 9 pins))
FA-70S	3200382557	Adjustable, free-standing electrode stand (Height: 384 mm) *image on the right*
FA-70L	3200382560	Long, free-standing electrode stand (Height: 450-650mm) *image on the right*
	3200373991	Arm for electrode stand FA-70A, FA-70S, & FA-70L
	3200373961	Electrode holders, 2pcs (for mounting electrode with round cap on electrode stand arm)
	3200382477	Electrode protection caps, 3pcs (for 9615S-10D, 9618S-10D, 9681S-10D pH electrode)
	3200043508	Electrode protection caps, 5pcs (for 9621-10D, 9625-10D, 9630-10D, 9631-10D, 9632-10D, 6367-10D, 6377-10D, 6252-10D, 6261-10C, 1066A-10C, 1076-10C, 2060-10T, 9300-10D, 9382-10D, 3552-10D pH electrode)
	3200382482	Electrode protection cap for long electrode (for 9680S-10D, 9480-10C pH Electrode)

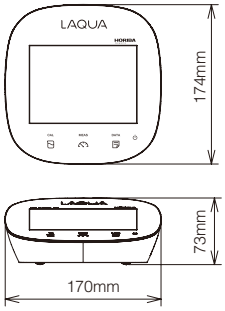

Body・Standard Electrode Stand

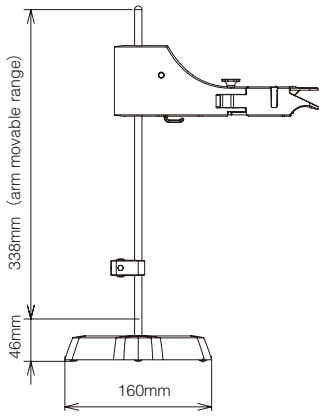

Long Type Electrode Stand

※Stretch shaft

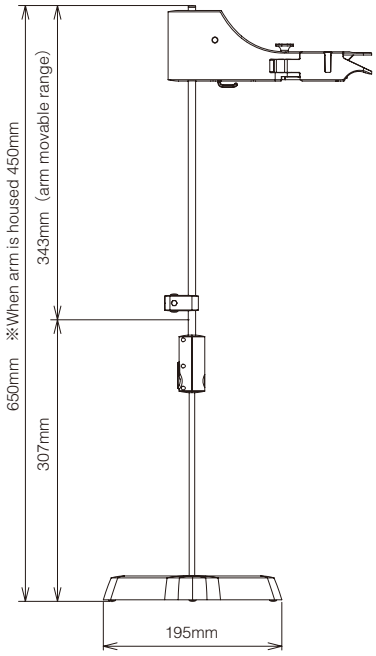

Standard Electrode Stand FA-70S (384mm)

Long Type Electrode Stand FA-70L (450~650m m)

Visit HORIBA's website!

Water Quality Analyzers

www.horiba-laqua.com

With over 60 years of engineering excellence, HORIBA's diverse range of water quality analyzers and electrodes are ideal for everyday laboratory needs through to the most demanding of applications. Visit our website for a wealth of useful information and water quality measurement tips to help you obtain the best results in your work.

Benchtop Meters

Developed using extensive feedback from users, our new LAQUA meters deliver the best solution for water quality analysis. Our LAQUA website features an online 'Selection Guide' to enable you to find the perfect LAQUA meter and electrode for your need.

Handheld Meters

In the lab, in the field or anywhere you need it. LAQUA Handheld meters are designed for use with one hand and with an IP67 waterproof rating and shock-resistant casing. Meters can be used for long periods, even in dark places, making it ideal for field measurements in rivers and lakes.

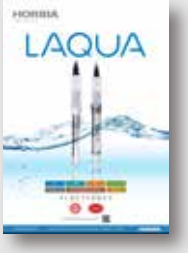

Electrodes

Various electrodes to match any application. A wide range of products for both benchtop and portable systems are available, including easy and reliable standard models, application-focused models for small samples or large containers, and special electrodes for specific sample characteristics.

Pocket Meters

Analyzing water quality is simplified when using our LAQUAtwin range of meters. Designed to produce accurate and reliable results. Anyone, anywhere, at any time can measure samples easily with a LAQUAtwin meter. See just how good they are at our website.

Application Notes

LAQUAtwin pocket meters offer quick and convenient alternative to analyze important parameters with high accuracy. Several application notes are available at (http://goo.gl/znwE6j) detailing the use of LAQUAtwin and the results achieved for the respective applications. Additional application notes will be added when available.

RoHS

HORIBA Instruments (Singapore) Pte. Ltd.
83 Science Park Drive, #02-02A,
The Curie, Singapore 118258
Phone: 65 6908-9660
Fax: 65 6745-8155
e-mail: **laqua@horiba.com**
www.horiba-laqua.com

HORIBA UK Limited
Kyoto Close, Moulton Park,
Northampton NN3 6FL
Phone: 44 (0) 1604 542567
Fax: 44 (0) 1604 542699
e-mail: **waterquality@horiba.com**
www.horiba.com/uk

Brochure HBTC-05-2017B